| REVISION RECORD | | | |
|---|---|---|---|
| LTR | ECO NO: | APPROVED: | DATE: |
| | | | |
| | | | |
| | | | |
| | | | |

# ANT_SWITCH/GSM_PA

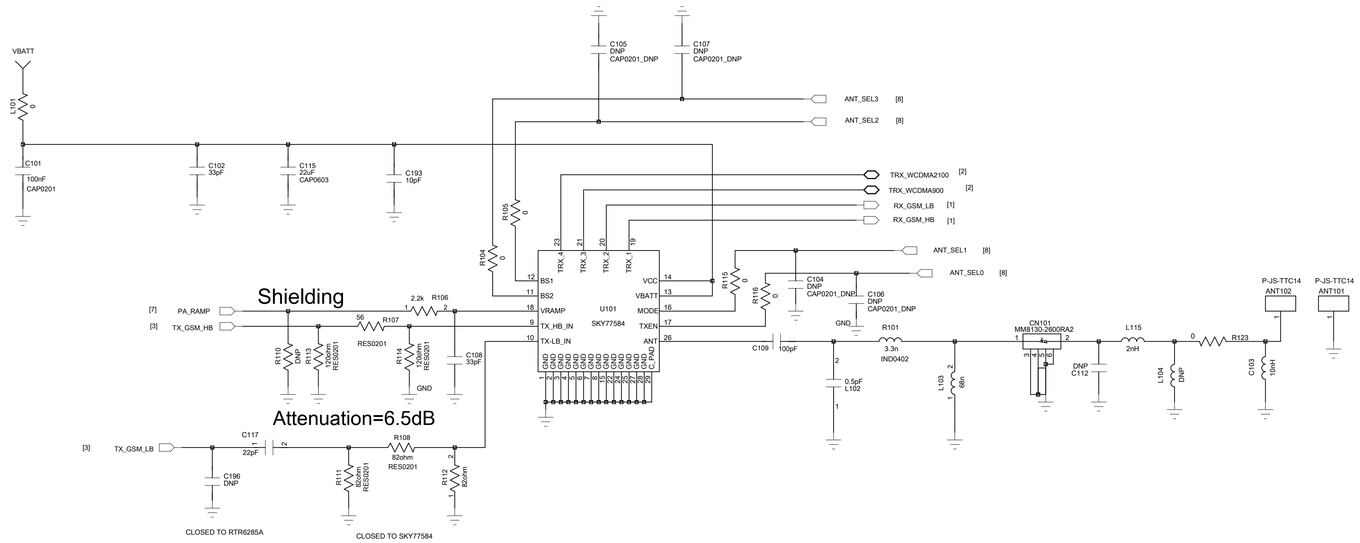


**Table 3. SKY77584 Mode Control Logic**

| Mode | Input Control Bits | | | |
|---|---|---|---|---|
| | TXEN | MODE | BS1 | BS2 |
| STANDBY | 0 | 0 | 0 | 0 |
| LB_VMAX_TX | 1 | 0 | 0 | 1 |
| LB_VMAX_TX_SD | 1 | 0 | 0 | 0 |
| HB_VMAX_TX | 1 | 0 | 1 | 1 |
| HB_VMAX_TX_SD | 1 | 0 | 1 | 0 |
| TRX1 | 0 | 1 | 0 | 0 |
| TRX2 | 0 | 1 | 1 | 0 |
| TRX3 | 0 | 1 | 0 | 1 |
| TRX4 | 0 | 0 | 1 | 0 |

# GSM RX PART

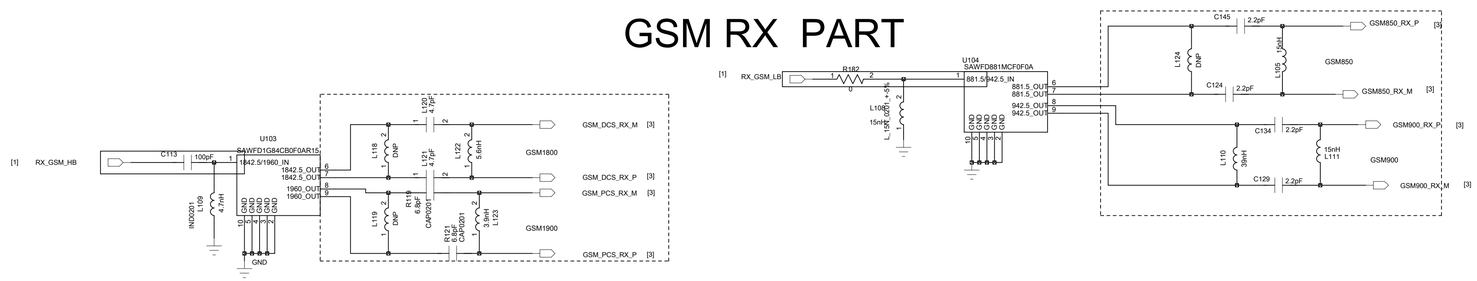


Shielding

# GPS RF PART

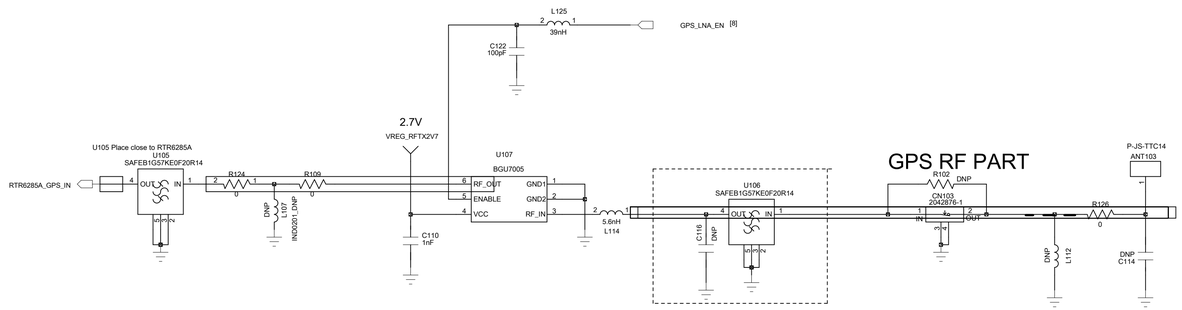


# BT/WIFI Antenna

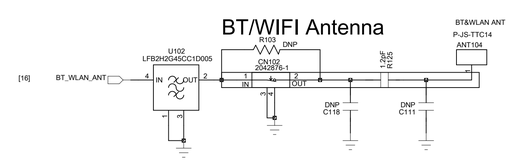


| | | | |
|---|---|---|---|
| COMPANY: | | | |
| TITLE: ANT_FRONT END | | | |
| DRAWN: | DATED: | CODE: | SIZE: | DRAWING NO: | REV: |
| CHECKED: | DATED: | | | | |
| QUALITY CONTROL: | DATED: | | | | |
| RELEASED: | DATED: | SCALE: | | SHEET: 1 OF 16 | |

| REVISION RECORD | | | |
|---|---|---|---|
| LTR | ECO NO: | APPROVED: | DATE: |
| | | | |
| | | | |
| | | | |
| | | | |

| BC1 | Downlink | Uplink |
|---|---|---|
| IMT2100 Freq(MHz) | 2110 ~ 2170 | 1920 ~ 1980 |

# UMTS BC1 PA

TX far away from RX

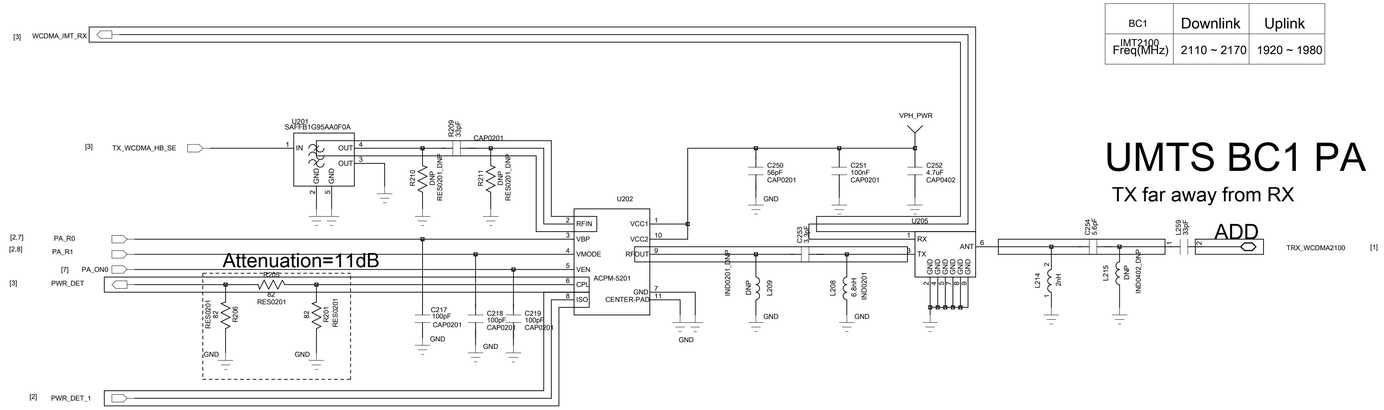


| BC8 | Downlink | Uplink |
|---|---|---|
| UMTA900 Freq(MHz) | 925 ~ 960 | 880 ~ 915 |

# UMTS BC8 PA

TX far away from RX

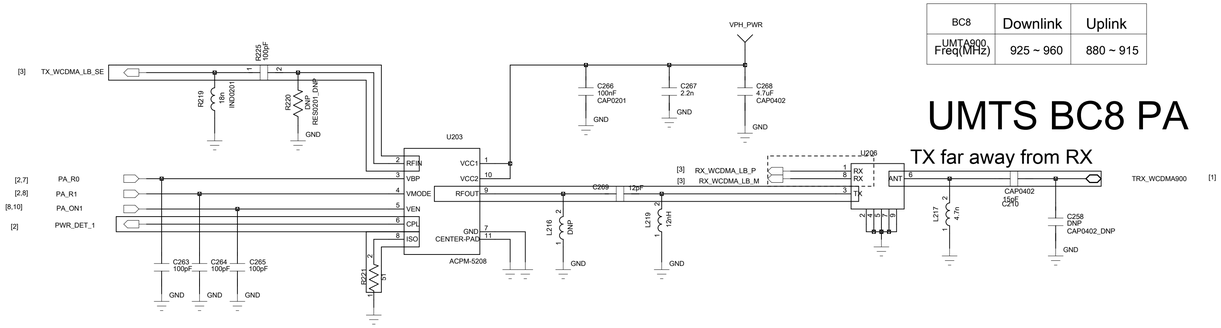


| | |
|---|---|
| DRAWN: | DATED: |
| CHECKED: | DATED: |
| QUALITY CONTROL: | DATED: |
| RELEASED: | DATED: |

COMPANY:

TITLE: RF PA

| CODE: | SIZE: | DRAWING NO: | REV: |
|---|---|---|---|
| | | | |

SCALE:

SHEET: 2 OF 17

| REVISION RECORD | | | |
|---|---|---|---|
| LTR | ECO NO: | APPROVED: | DATE: |
| | | | |
| | | | |
| | | | |
| | | | |

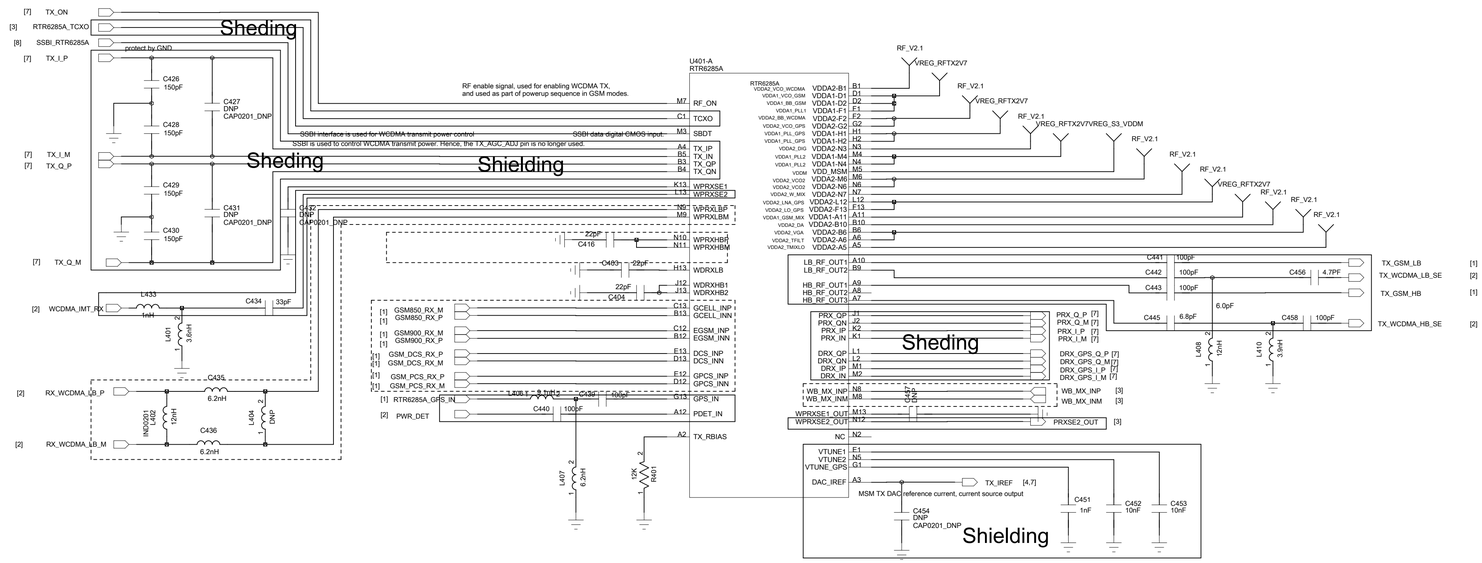


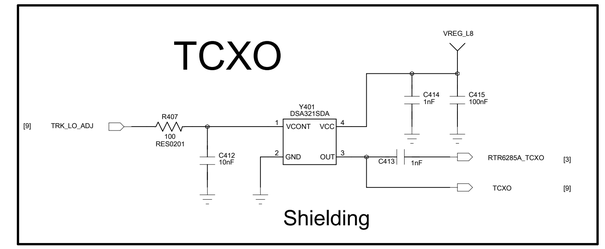


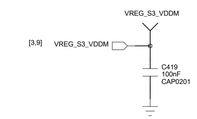


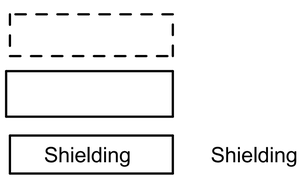


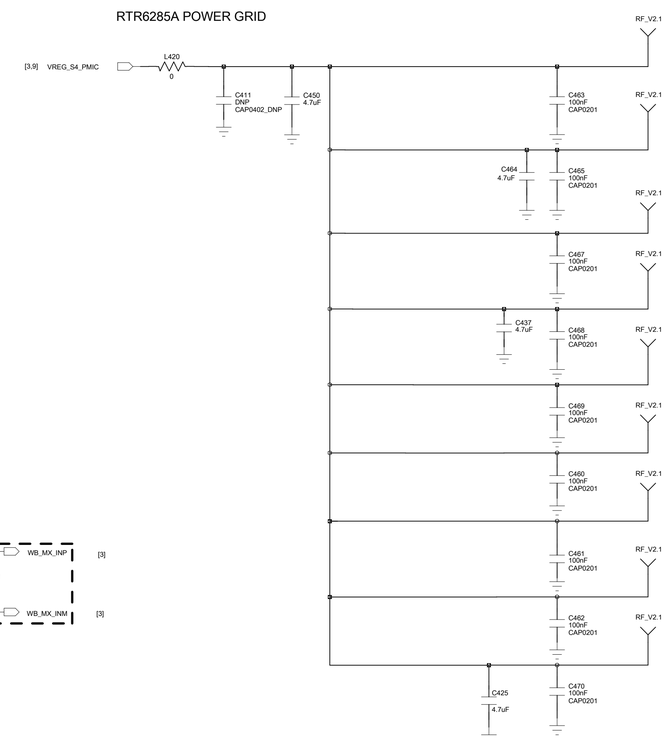


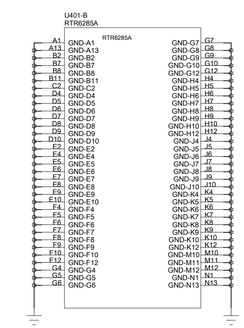


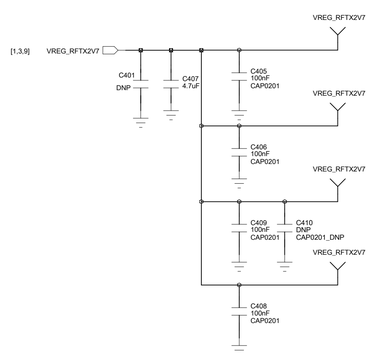


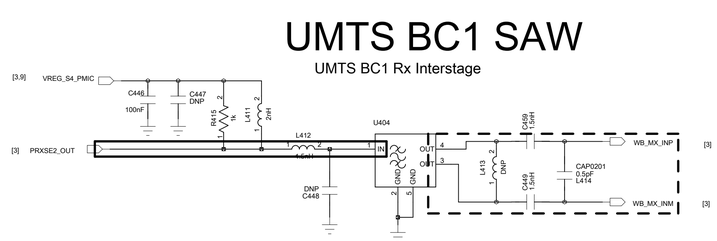


| | |
|---|---|
| DRAWN: | DATED: |
| CHECKED: | DATED: |
| QUALITY CONTROL: | DATED: |
| RELEASED: | DATED: |

COMPANY:

TITLE: RTR6285

| CODE: | SIZE: | DRAWING NO: | REV: |
|---|---|---|---|
| | | | |

SCALE: SHEET: 4 OF 16

| REVISION RECORD | | | |
|---|---|---|---|
| LTR | ECO NO: | APPROVED: | DATE: |
| | | | |
| | | | |
| | | | |
| | | | |

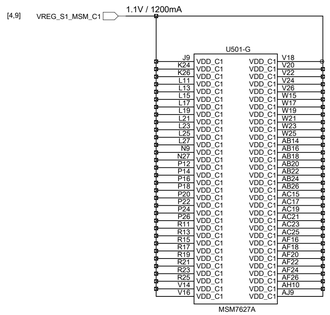


There are a total of 52 pins on MSM_C1.
These caps are to be shared by multiple power pins

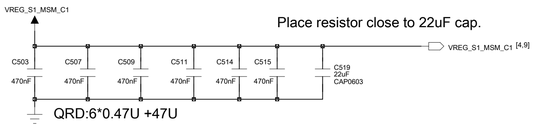


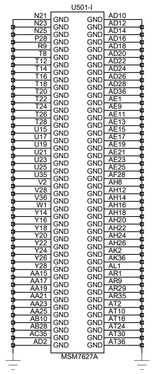


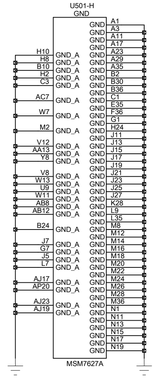


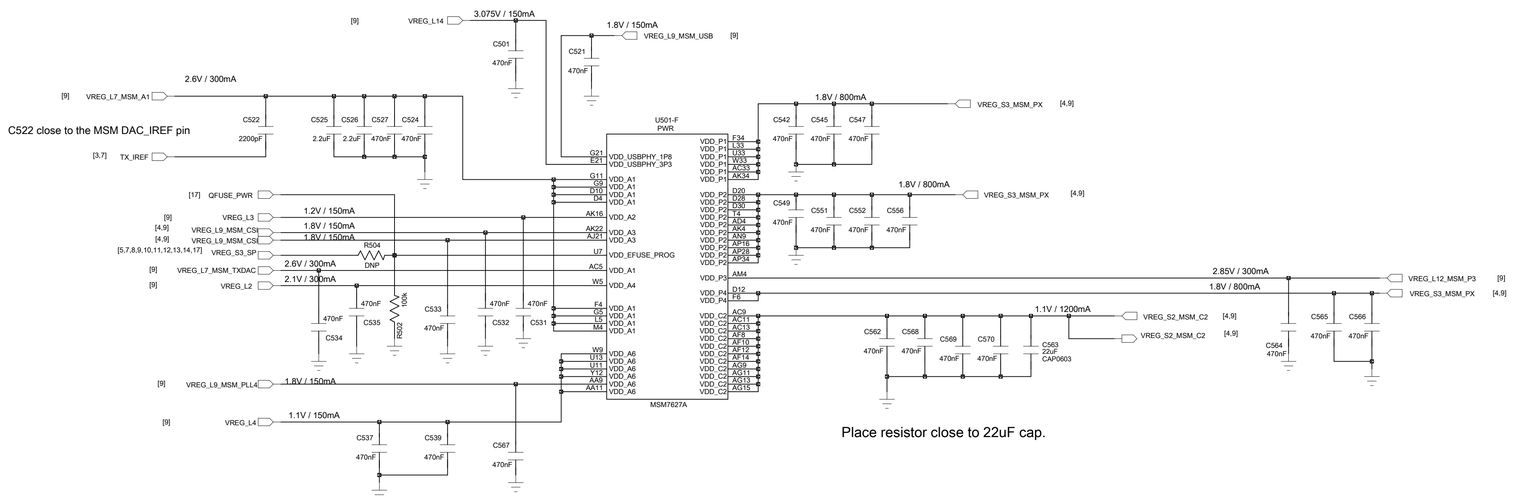


VREG_L4_MSM_PLLX(X=0,1,2,3 and 5). Refer Device Spec (80-VM155-1)

Please connect pin U7 to 1.8V to program the efuse.(if need)

| | | | | | |
|---|---|---|---|---|---|
| DRAWN: | DATED: | COMPANY: | | | |
| | | TITLE: MSM8225 PWR | | | |
| CHECKED: | DATED: | CODE: | SIZE: | DRAWING NO: | REV: |
| QUALITY CONTROL: | DATED: | | | | |
| RELEASED: | DATED: | SCALE: | | SHEET: 5 OF 16 | |

| REVISION RECORD | | | |
|---|---|---|---|
| LTR | ECO NO: | APPROVED: | DATE: |
| | | | |
| | | | |
| | | | |
| | | | |
| | | | |

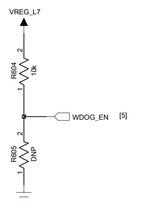


Watch dog enable/disable select

WDOG_EN=0 DISABLE WDOG

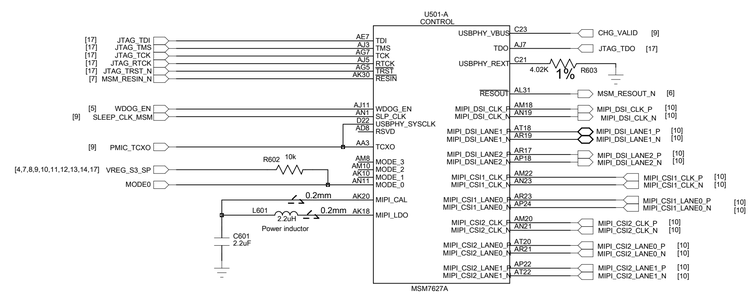


1. MIPI internal regulator is set to Switching mode by default.
   For LDO mode install 0 ohm instead of 2.2uH inductor.
2. MIPI signals should be routed as differential pair of 100 ohm impedance.

| MODE[3:0] | MSM7X27A OPERATING MODE |
|---|---|
| 0000 | ARM9 on P_Jtag; ARM CORTEX A5 on A_Jtag |
| 0001 | ARM9 + ARM CORTEX A5 daisy chain on P_Jtag |

P_Jtag = Primary JTAG port, A_Jtag = Auxilliary JTAG port

MODE(3:0) pins have internal Pull Dowens.

| | | | | |
|---|---|---|---|---|
| DRAWN: | DATED: | COMPANY: | | |
| | | TITLE: MSM8225 CTL | | |
| CHECKED: | DATED: | CODE: | SIZE: | DRAWING NO: | REV: |
| QUALITY CONTROL: | DATED: | | | |
| RELEASED: | DATED: | SCALE: | | SHEET: 6 OF 16 |

| REVISION RECORD | | | |
|---|---|---|---|
| LTR | ECO NO: | APPROVED: | DATE: |
| | | | |
| | | | |
| | | | |
| | | | |

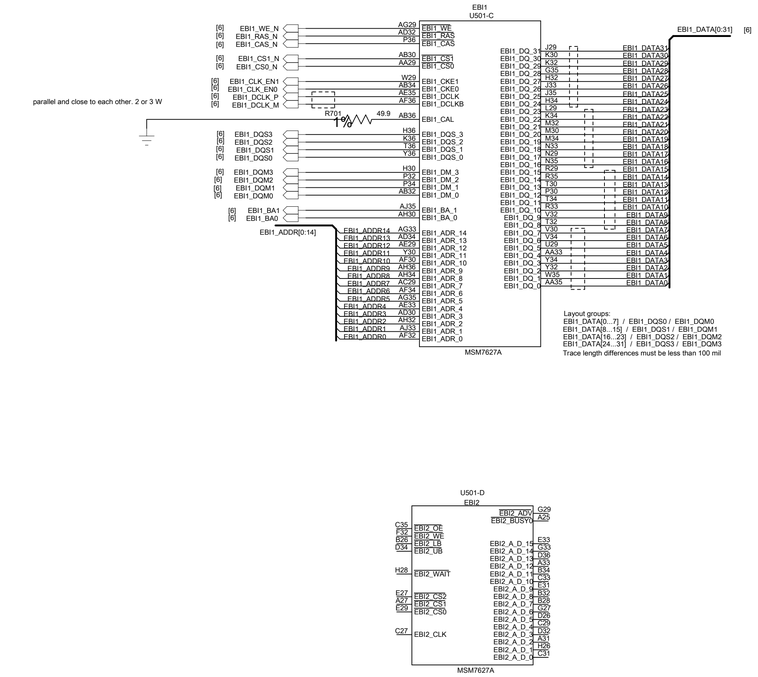


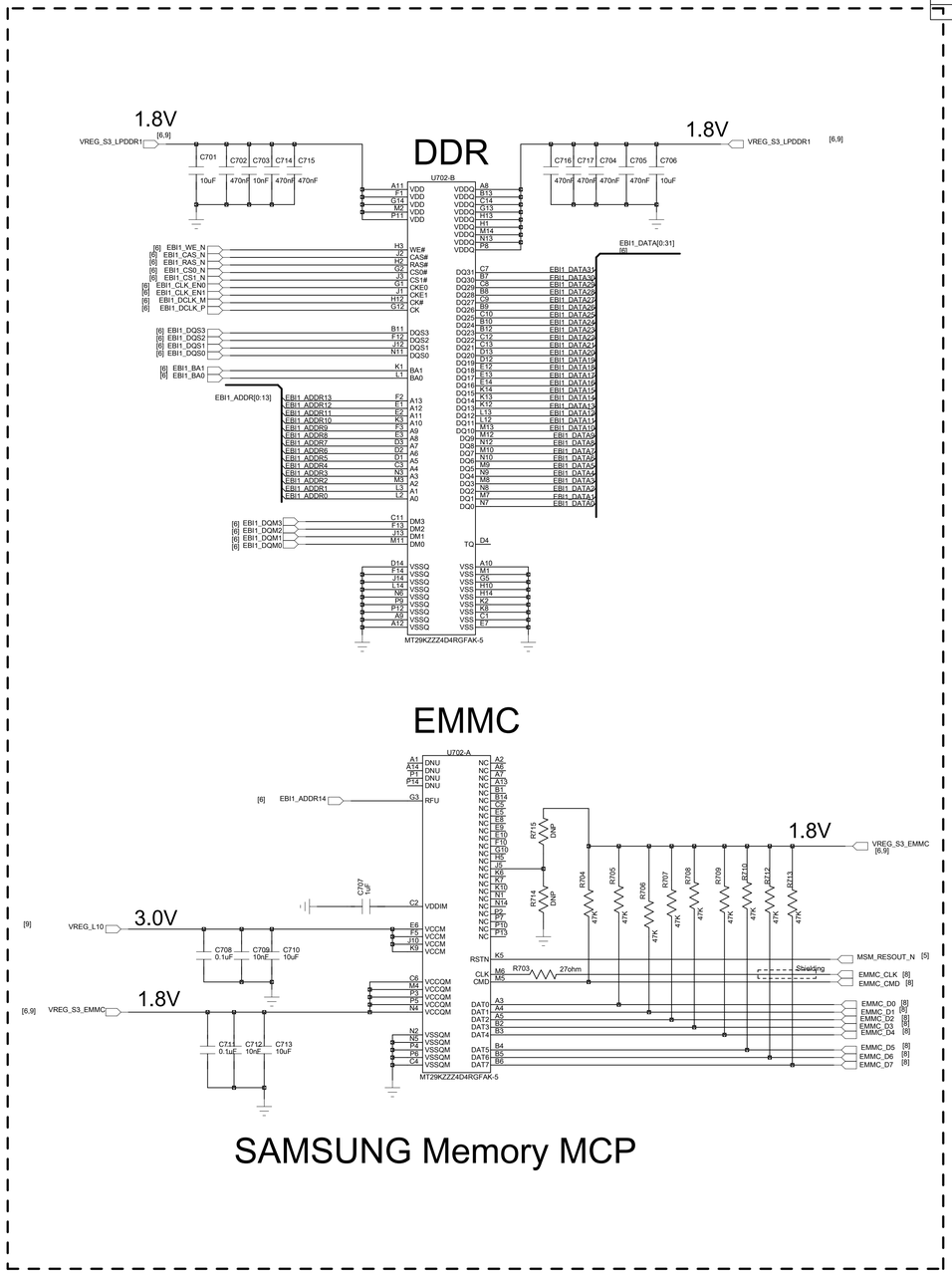


| | | | |
|---|---|---|---|
| DRAWN: | DATED: | COMPANY: | |
| CHECKED: | DATED: | TITLE: MSM8225 EBI MEMORY | |
| QUALITY CONTROL: | DATED: | CODE: / SIZE: / DRAWING NO: | REV: |
| RELEASED: | DATED: | SCALE: | SHEET: 7 OF 16 |

| REVISION RECORD | | | |
|---|---|---|---|
| LTR | ECO NO: | APPROVED: | DATE: |
| | | | |
| | | | |
| | | | |
| | | | |
| | | | |

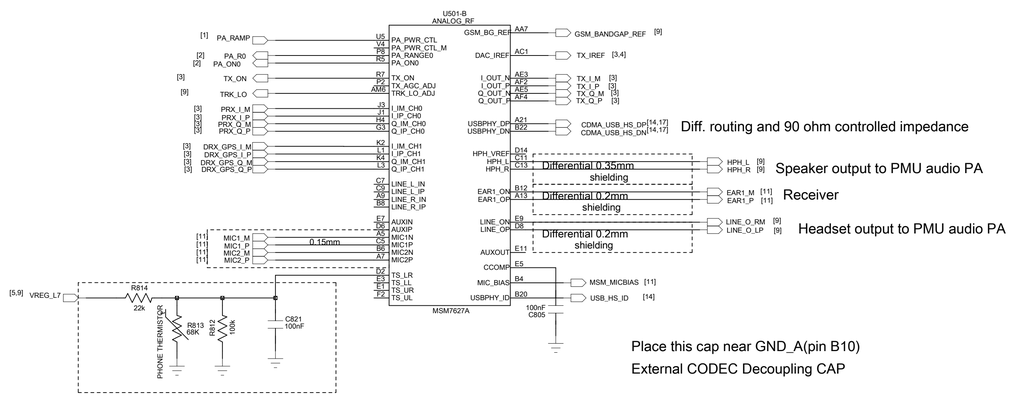


MSM THERMAL

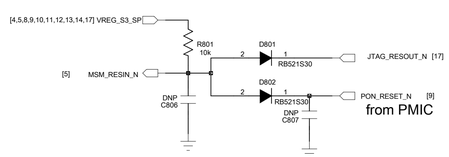


| | | | |
|---|---|---|---|
| COMPANY: | | | |
| TITLE: MSM8225 AUDIO RF | | | |
| DRAWN: | DATED: | CODE: | SIZE: | DRAWING NO: | REV: |
| CHECKED: | DATED: | | | | |
| QUALITY CONTROL: | DATED: | | | | |
| RELEASED: | DATED: | SCALE: | SHEET: 8 OF 16 | | |

| REVISION RECORD | | | |
|---|---|---|---|
| LTR | ECO NO: | APPROVED: | DATE: |
| | | | |
| | | | |
| | | | |
| | | | |

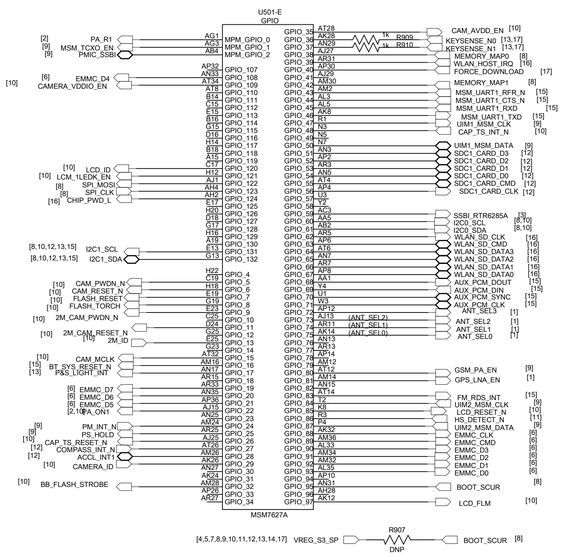


BOOT_SCUR=1 ENABLE SECURE BOOT

# 7 QRD DDR Auto Detection Implementation

## 7.1 Definition

QRD implements the lpddr1 auto detection by two GPIO pins.

NOTE: Be aware that this implementation needs hardware support. We use GPIO38 and GPIO42 as memory auto detection configuration. The detail definition is as in the Table 3:

| Vendor | Part Number | GPIO38 | GPIO42 |
|---|---|---|---|
| SANDISK | SD5D14A-4G | H | H |
| HYNIX | H9DP32A6AJACGR-KEM | H | L |
| SAMSUNG | Customer defined | L | H |
| MICRO | Customer defined | L | L |

**Table 3 Memory auto detection configuration**

GPIO Values are as follows:

| GPIO42 | GPIO38 | |
|---|---|---|
| 1 | 1 | = 0x3 SD5D14A-4G |
| 1 | 0 | = 0x2 SAMSUNG |
| 0 | 1 | = 0x1 H9DP32A6AJACGR-KEM |
| 0 | 0 | = 0x0 MICRON |

QUALCOMM
2010.04.22 at 21:09:53 PDT
kong.fanqing-byd.com
210.1.8.228

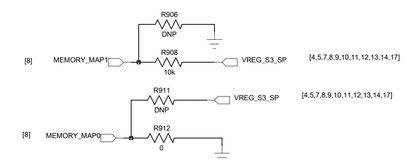


Memory Auto detection
Samsung Memory

## I2C bus pull high design

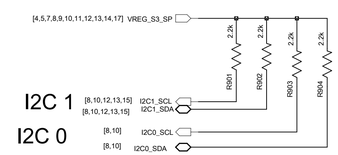


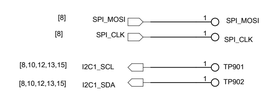


1. The PCM/I2S signals are muxed behind GPIO[68:71]. One of them can be used at a time while tri-stating the other in software.

| | | | | | |
|---|---|---|---|---|---|
| DRAWN: | DATED: | COMPANY: | | | |
| | | TITLE: MSM8225 GPIO | | | |
| CHECKED: | DATED: | CODE: | SIZE: | DRAWING NO: | REV: |
| QUALITY CONTROL: | DATED: | | | | |
| RELEASED: | DATED: | SCALE: | | SHEET: 9 OF 16 | |

| REVISION RECORD | | | |
|---|---|---|---|
| LTR | ECO NO: | APPROVED: | DATE: |
| | | | |
| | | | |
| | | | |
| | | | |

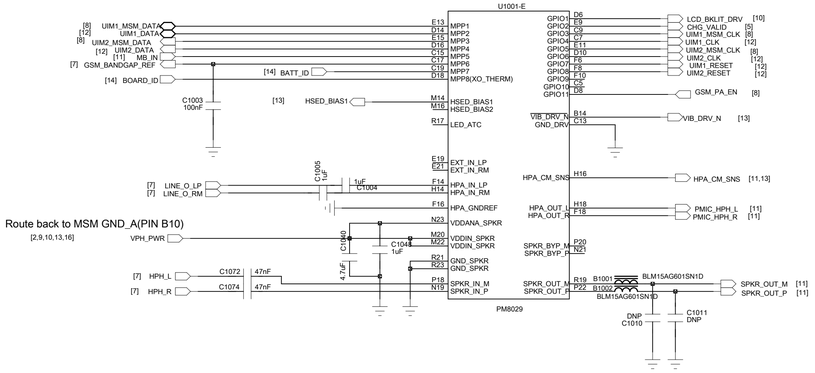


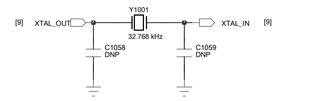


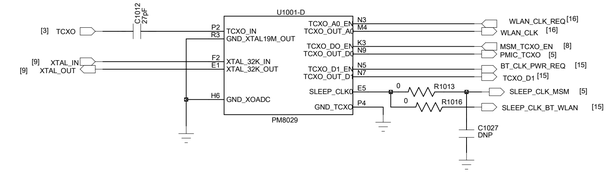


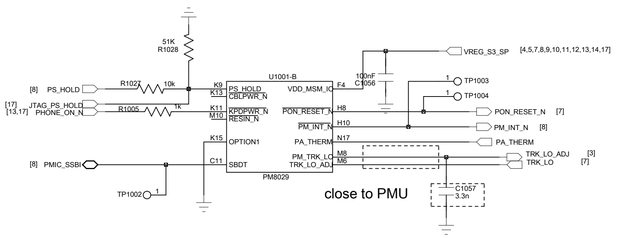


CAD NOTE:
The input and output cap ground of each regulator should be directly connected to A7, A15, E23, A21

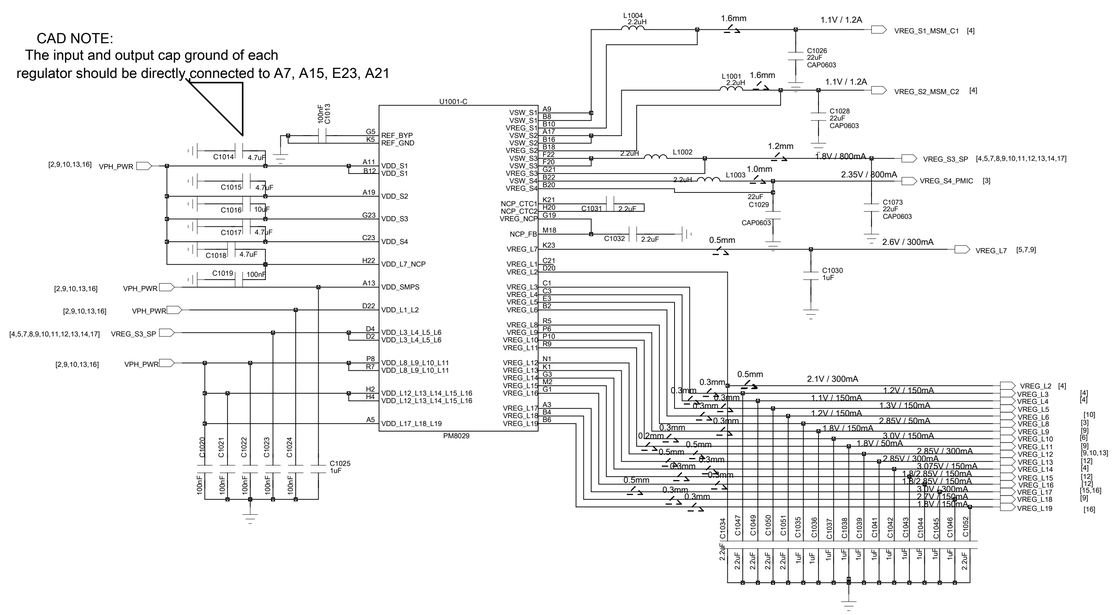


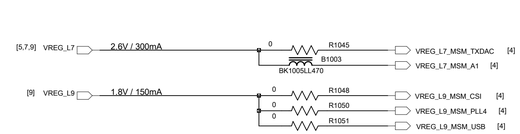

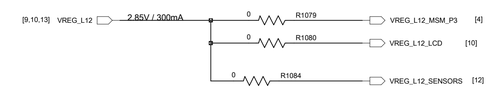


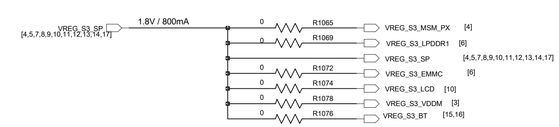


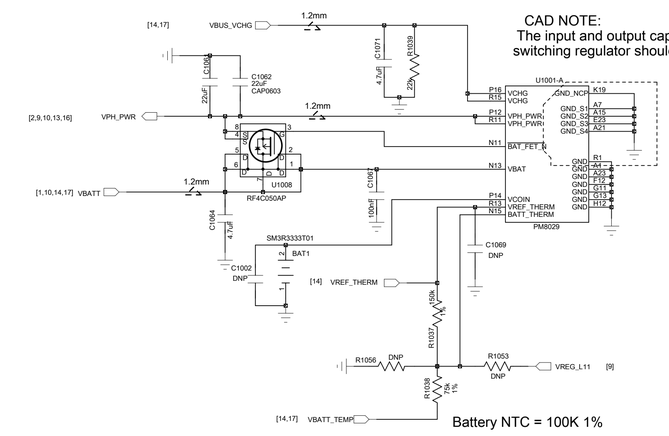


CAD NOTE:
The input and output cap ground of each switching regulator should be directly connected to these pins

**1) Battery thermistor detection**

The PM8029 IC has the ability to monitor the battery temperature completely through hardware comparators. (BATT_THERM is not routed to the HKADC in this case )

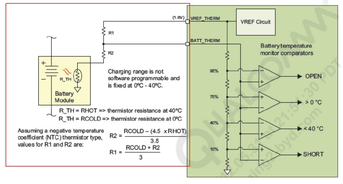


R1038 = 75K
R1037 = 150K
Rcold = 375K T = -1
Rhot = 25K T = +57

Battery NTC = 100K 1%

R1037 = (Rcold + R1038) / 3
R1038 = [Rcold - 4.5 * Rhot ] / 3.5

| | | | | | |
|---|---|---|---|---|---|
| COMPANY: | | | | | |
| TITLE: PMU PM8029 | | | | | |
| DRAWN: | DATED: | CODE: | SIZE: | DRAWING NO: | REV: |
| CHECKED: | DATED: | | | | |
| QUALITY CONTROL: | DATED: | | | | |
| RELEASED: | DATED: | SCALE: | | SHEET: 10 OF 16 | |

| REVISION RECORD | | | |
|---|---|---|---|
| LTR | ECO NO: | APPROVED: | DATE: |
| | | | |
| | | | |
| | | | |
| | | | |

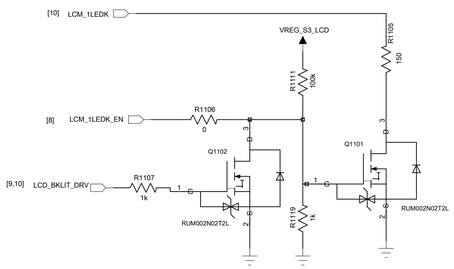


One LED enable

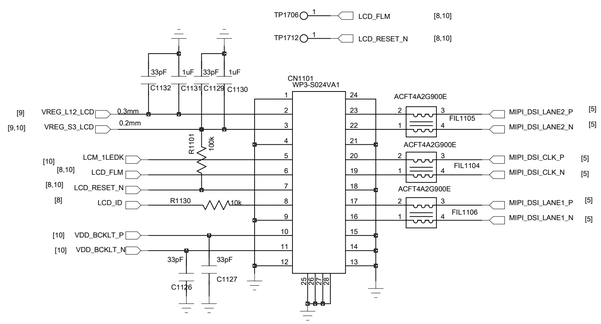


LCD Connector

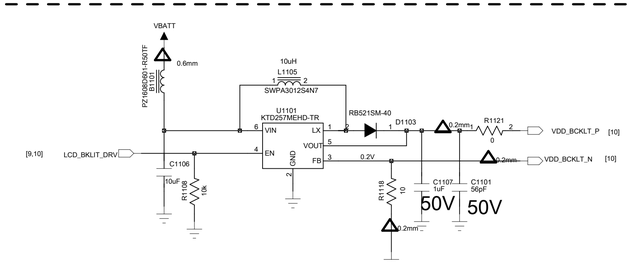


LCD BL Driver

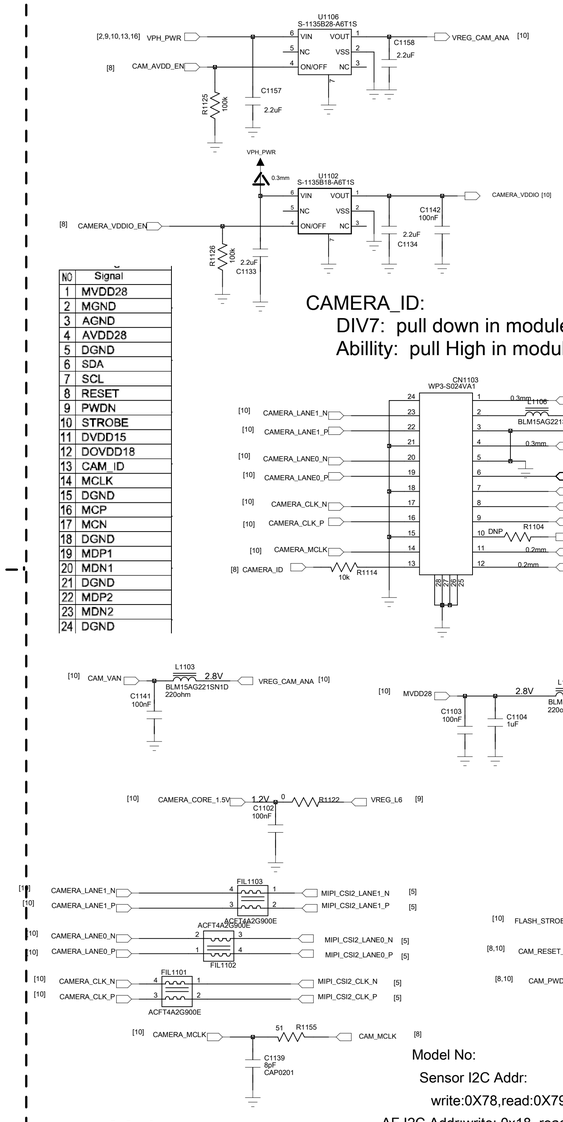


| NO | Signal |
|---|---|
| 1 | MVDD28 |
| 2 | MGND |
| 3 | AGND |
| 4 | AVDD28 |
| 5 | DGND |
| 6 | SDA |
| 7 | SCL |
| 8 | RESET |
| 9 | PWDN |
| 10 | STROBE |
| 11 | DVDD15 |
| 12 | DOVDD18 |
| 13 | CAM_ID |
| 14 | MCLK |
| 15 | DGND |
| 16 | MCP |
| 17 | MCN |
| 18 | DGND |
| 19 | MDP1 |
| 20 | MDN1 |
| 21 | DGND |
| 22 | MDP2 |
| 23 | MDN2 |
| 24 | DGND |

CAMERA_ID:
DIV7: pull down in module
Abillity: pull High in module

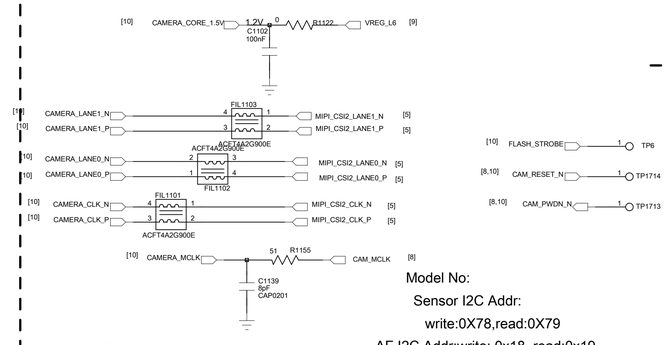


Main camera

Model No:
Sensor I2C Addr:
write:0X78,read:0X79
AF I2C Addr:write: 0x18, read:0x19

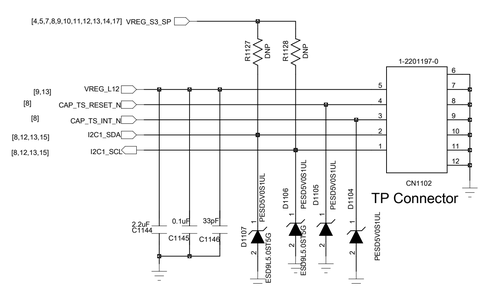


TP Connector

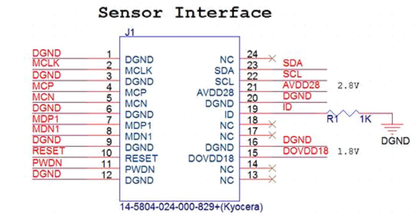


front camera

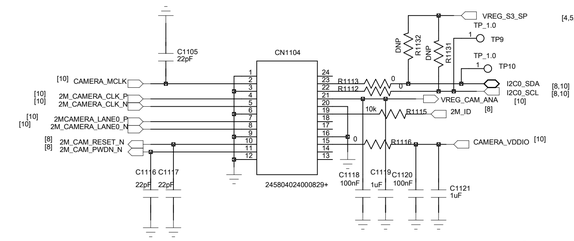


Slave address:0X60,read:0X61

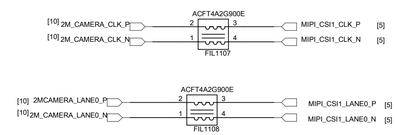


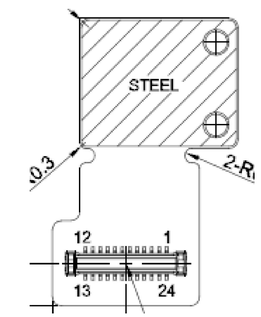


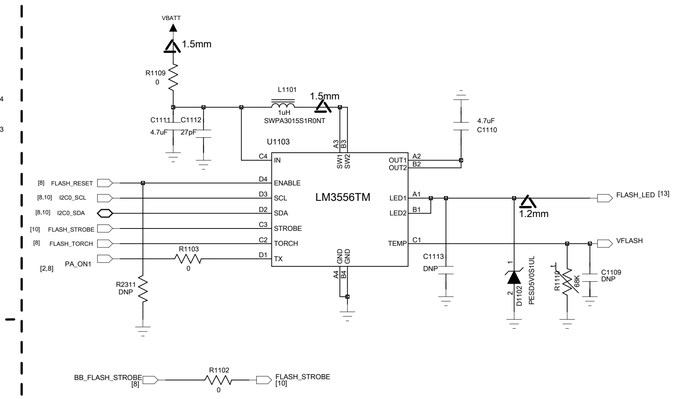


Flash LED Driver
The LM3556 7-bit address is 0x63
The LM3554 7-bit address is 0x53

| | | | | |
|---|---|---|---|---|
| COMPANY: | | | | |
| TITLE: LCD CAM TP | | | | |
| DRAWN: | DATED: | CODE: | SIZE: | DRAWING NO: | REV: |
| CHECKED: | DATED: | | | | |
| QUALITY CONTROL: | DATED: | | | | |
| RELEASED: | DATED: | SCALE: | | SHEET: 11 OF 16 | |

| REVISION RECORD | | | |
|---|---|---|---|
| LTR | ECO NO: | APPROVED: | DATE: |
| | | | |
| | | | |
| | | | |
| | | | |

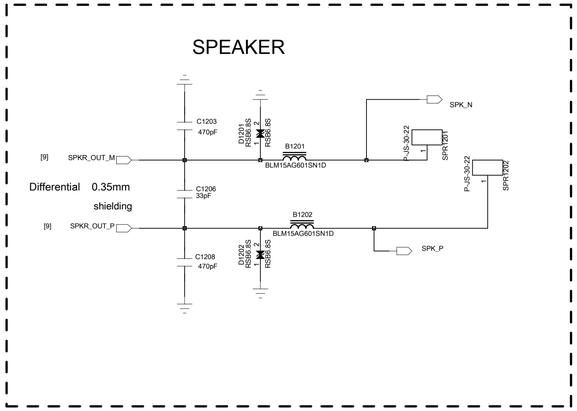


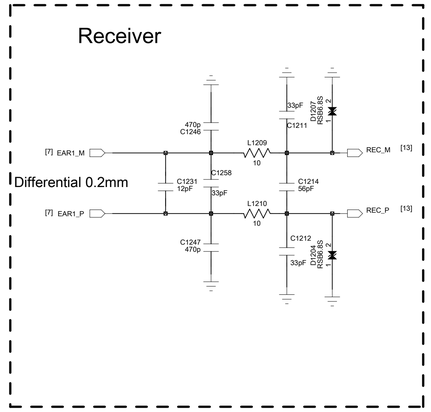


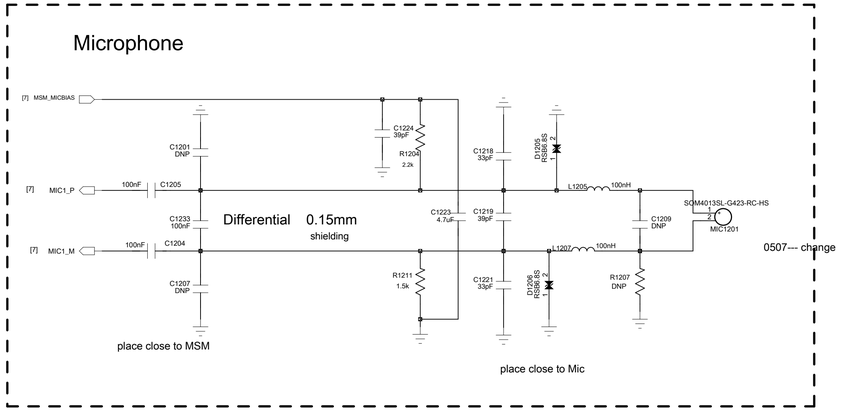


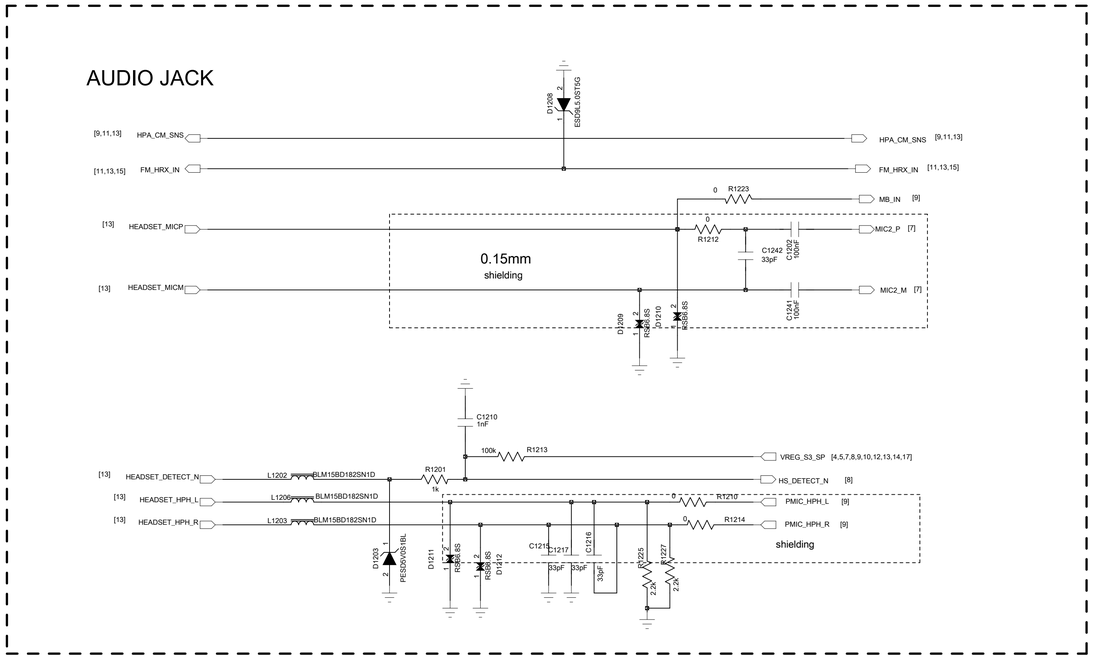


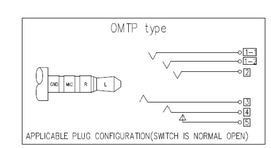


| Items | Part Name | Signal Name | PAD Name |
|---|---|---|---|
| 5 | Contact 5# | PLUG DET | f |
| 4 | I/M contact 4 | PLUG DET | e |
| 3 | Contact 3# | HS GND | d |
| 2 | Contact 2# | HS EAR L | c |
| 1-2 | Contact 1# | HS EAR R | b |
| 1-1 | Contact 1# | HS MIC | a |

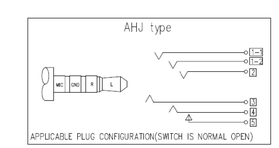


| Items | Part Name | Signal Name | PAD Name |
|---|---|---|---|
| 5 | Contact 5# | PLUG DET | f |
| 4 | I/M contact 4 | PLUG DET | e |
| 3 | Contact 3# | HS MIC | d |
| 2 | Contact 2# | HS EAR L | c |
| 1-2 | Contact 1# | HS EAR R | b |
| 1-1 | Contact 1# | HS GND | a |

| | | | |
|---|---|---|---|
| DRAWN: | DATED: | COMPANY: | |
| CHECKED: | DATED: | TITLE: AUDIO | |
| QUALITY CONTROL: | DATED: | CODE: / SIZE: | DRAWING NO: / REV: |
| RELEASED: | DATED: | SCALE: | SHEET: 12 OF 16 |

| REVISION RECORD | | | |
|---|---|---|---|
| LTR | ECO NO: | APPROVED: | DATE: |
| | | | |
| | | | |
| | | | |
| | | | |

# G sensor

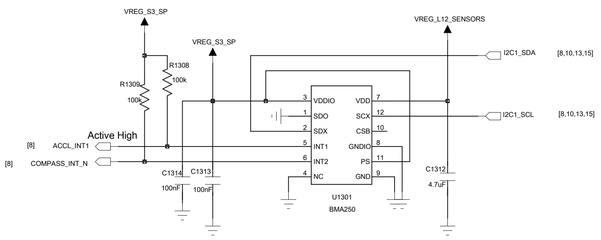


G Sensor
Slave address: 0x18H

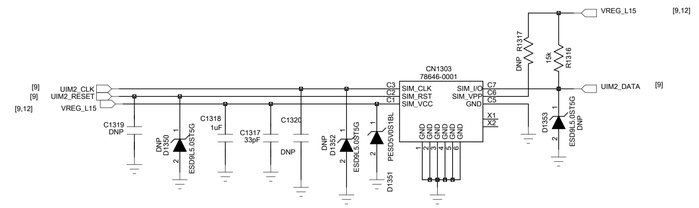


RUIM2_GSM

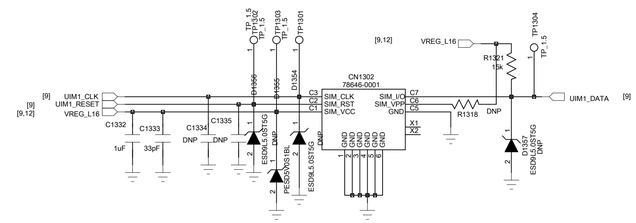


RUIM1_CDMA

| PIN NO. | ASSIGNMENT |
|---|---|
| C1 | Vcc (SUPPLY VOLTAGE) |
| C2 | RST (RESET SIGNAL) |
| C3 | CLK (CLOCK SIGNAL) |
| C4 | RESERVED |
| C5 | GND |
| C6 | Vpp (VARIABLE SUPPLY VOLTAGE) |
| C7 | I/O (DATA INPUT/OUTPUT) |
| C8 | RESERVED |
| X1 | NOT GND. FOR HOLD DOWN ONLY. (NOTE:X1 IS LINKED TO C1) |
| X2 | NOT GND. FOR HOLD DOWN ONLY. (NOTE:X2 IS LINKED TO C3) |

## MICRO SD

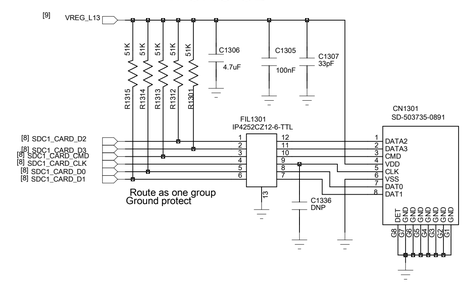


| | | | |
|---|---|---|---|
| DRAWN: | DATED: | COMPANY: | |
| CHECKED: | DATED: | TITLE: SENSOR SD RUIM | |
| QUALITY CONTROL: | DATED: | CODE: / SIZE: / DRAWING NO: | REV: |
| RELEASED: | DATED: | SCALE: | SHEET: 13 OF 16 |

| | Down to GND |
|---|---|
| GPIO36<br>KEYSENSE_N0 | V+ |
| GPIO37<br>KEYSENSE_N1 | V- |
| | LOCK&Power Key |

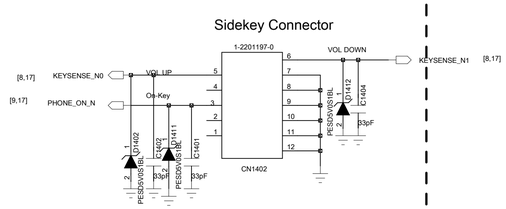


Side Key

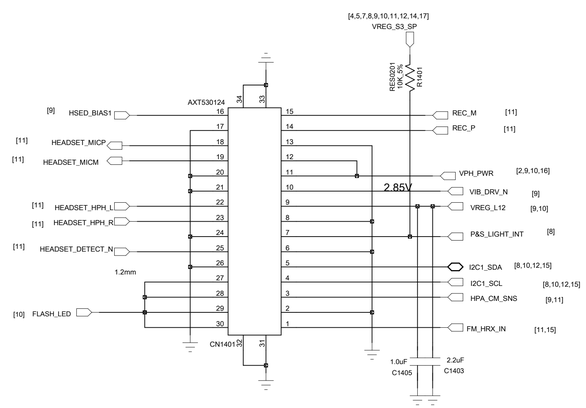


Flex part list:

1.Receiver
2.Vibrator
3.Audio Jack
4.P/L Sensor
5.Flash LED

| REVISION RECORD | | | |
|---|---|---|---|
| LTR | ECO NO: | APPROVED: | DATE: |
| | | | |
| | | | |
| | | | |
| | | | |
| | | | |

| | |
|---|---|
| DRAWN: | DATED: |
| CHECKED: | DATED: |
| QUALITY CONTROL: | DATED: |
| RELEASED: | DATED: |

COMPANY:

TITLE: KEYPAD and Flex connector

| CODE: | SIZE: | DRAWING NO: | REV: |
|---|---|---|---|

SCALE: SHEET: 14 OF 16

| REVISION RECORD | | | |
|---|---|---|---|
| LTR | ECO NO: | APPROVED: | DATE: |
| | | | |
| | | | |
| | | | |
| | | | |

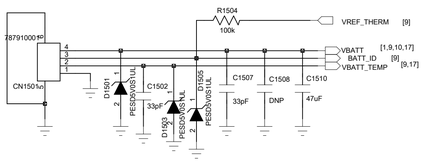


LESD9L5.0T5G

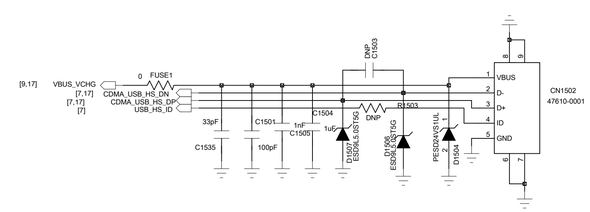


Micro_USB

Grounding Spring

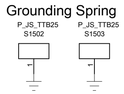


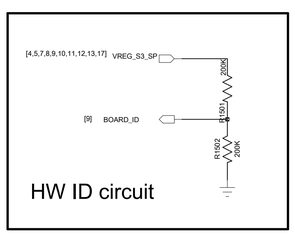


HW ID circuit

| Build | MPP port | R1501 (Unit:Kohm) | R1502 (Unit:Kohm) | Refer voltage (Unit:V) | ADC voltage (Unit:V) | HW ID | GSM P A |
|---|---|---|---|---|---|---|---|
| B0 | MPP8 | 200 | 510 Kohm | 1.8V | 1.3 | 0001 | SK77584 |
| B1 | MPP8 | 200 | 680 Kohm | 1.8V | 1.4 | 0101 | SK77584 |
| | | 200 | 390K ohm | | 1.2 | 0103 | RF3237 |
| | | 200 | 150K ohm | | 0.77 | 0105 | SK77584 (B1.1) |
| | | 200 | 240K ohm | | 1 | 0107 | SK77584 (B1) |
| S1.1 | MPP8 | 200 | 82 Kohm | 1.8V | 0.52 | 0111 | SK77584 |
| | | 200 | 130 Kohm | | 0.7 | 0119 | SK77584 (Brazil) |
| | | 200 | 300 Kohm | | 1.08 | 0113 | SK77584 (for TA) |
| B2 | MPP8 | 200 | 200 Kohm | 1.8V | 0.9 | 0201 | SK77584 |
| | | 200 | 100 Kohm | | 0.6 | 0203 | RF3237 |
| | | 200 | 1M ohm | | 1.5 | 0209 | Brazil |
| LV / MP | MPP8 | 200K | 0 ohm | 1.8V | 0 | 0301 | SK77584 |
| | | 200 | 39Kohm | | 0.3 | 0303 | RF3237 |
| | | 200 | 56Kohm | | 0.4 | 0305 | SK77584 |
| | | 200 | 1M ohm | | 1.5 | 0209 | Brazil |

| | | | | |
|---|---|---|---|---|
| DRAWN: | DATED: | COMPANY: | | |
| CHECKED: | DATED: | TITLE: USB BAT OVP | | |
| QUALITY CONTROL: | DATED: | CODE: | SIZE: | DRAWING NO: / REV: |
| RELEASED: | DATED: | SCALE: | SHEET: 15 OF 16 | |

| REVISION RECORD | | | |
|---|---|---|---|
| LTR | ECO NO: | APPROVED: | DATE: |
| | | | |
| | | | |
| | | | |
| | | | |

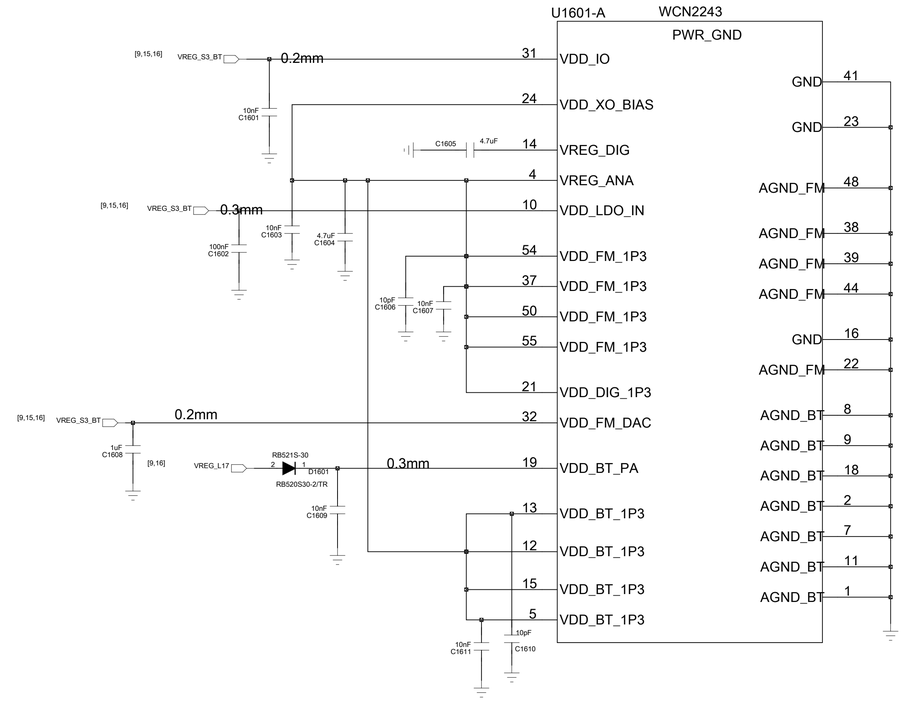


I2C ADDRESS: 0X0C

Notes: place C1606 close to Pin37 and C1607 close to Pin 54
Notes: place C1610 close to Pin13 and C1611 close to Pin 5

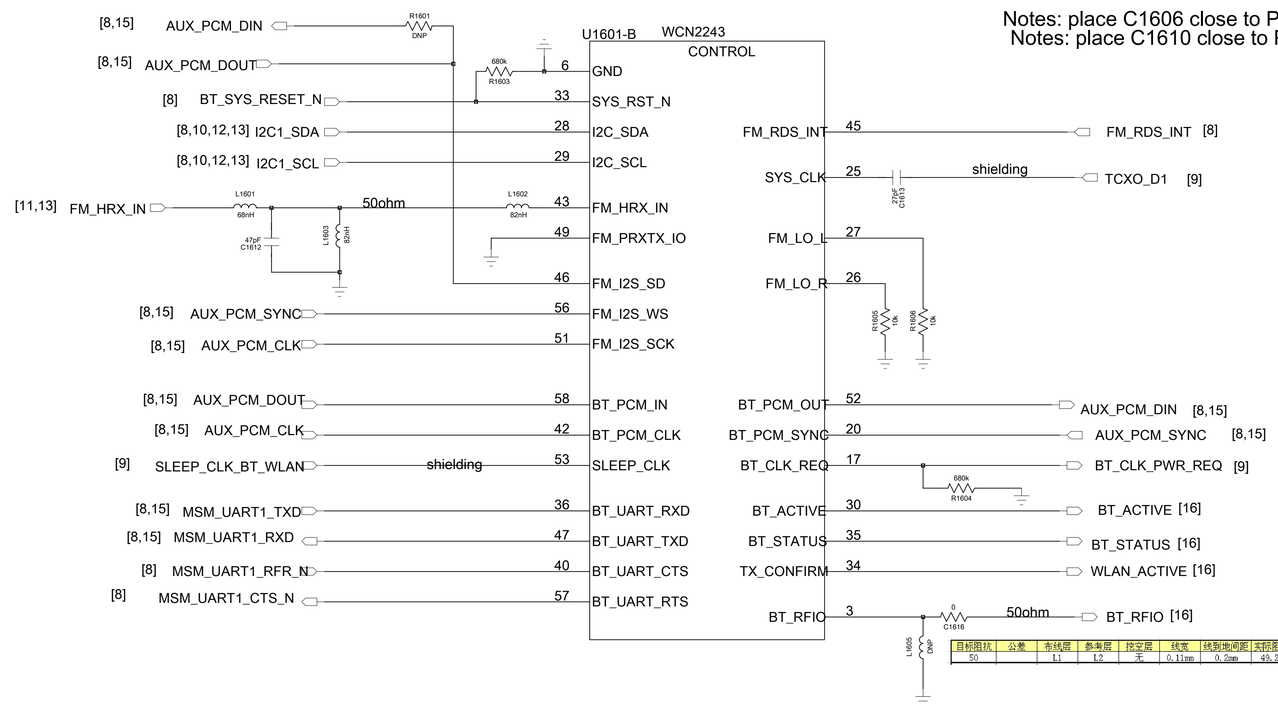


| 目标阻抗 | 公差 | 布线层 | 参考层 | 挖空层 | 线宽 | 线到地间距 | 实际阻抗 |
|---|---|---|---|---|---|---|---|
| 50 | | L1 | L2 | 无 | 0.11mm | 0.2mm | 49.27 |

TP1704 1 MSM_UART1_RXD [8,15]
TP1705 1 MSM_UART1_TXD [8,15]

| | | | | | |
|---|---|---|---|---|---|
| DRAWN: | DATED: | COMPANY: | | | |
| | | TITLE: BT and FM | | | |
| CHECKED: | DATED: | CODE: | SIZE: | DRAWING NO: | REV: |
| QUALITY CONTROL: | DATED: | | | | |
| RELEASED: | DATED: | SCALE: | | SHEET: 8 OF 12 | |

| REVISION RECORD | | | |
|---|---|---|---|
| LTR | ECO NO: | APPROVED: | DATE: |
| | | | |
| | | | |
| | | | |
| | | | |

these capacitors can be removed. It is highly suggested to keep on the board.

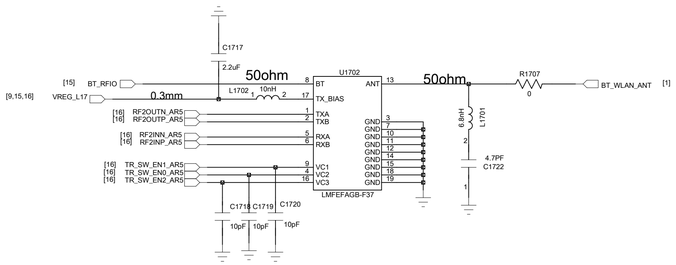


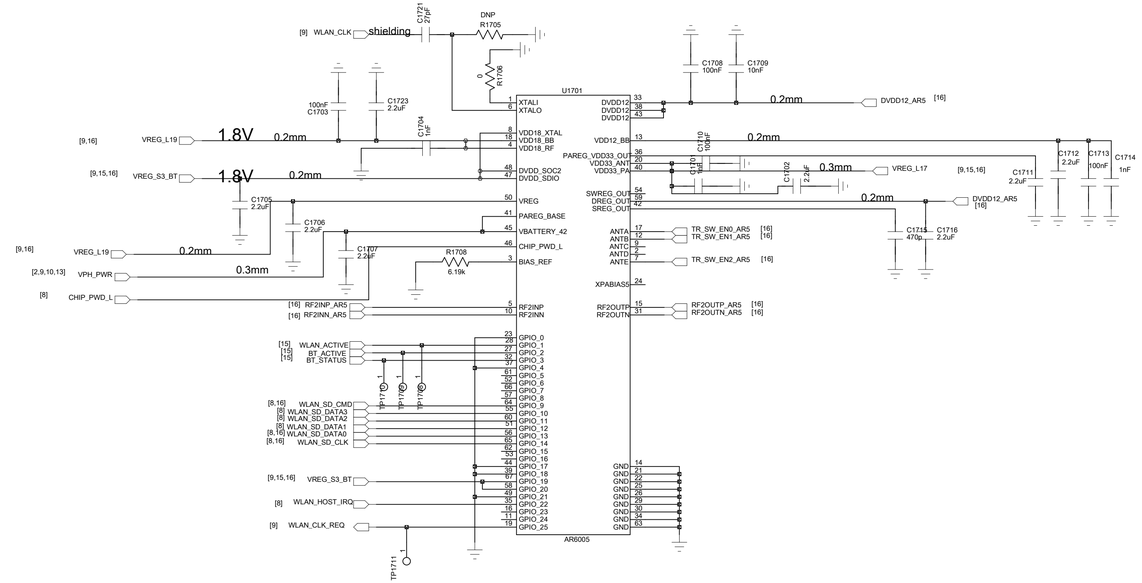


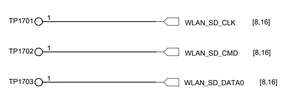


| | | | | |
|---|---|---|---|---|
| DRAWN: | DATED: | COMPANY: | | |
| | | TITLE: WIFI | | |
| CHECKED: | DATED: | CODE: | SIZE: | DRAWING NO: / REV: |
| QUALITY CONTROL: | DATED: | | | |
| RELEASED: | DATED: | SCALE: | | SHEET: 8 OF 12 |

| REVISION RECORD | | | |
|---|---|---|---|
| LTR | ECO NO: | APPROVED: | DATE: |
| | | | |
| | | | |
| | | | |
| | | | |

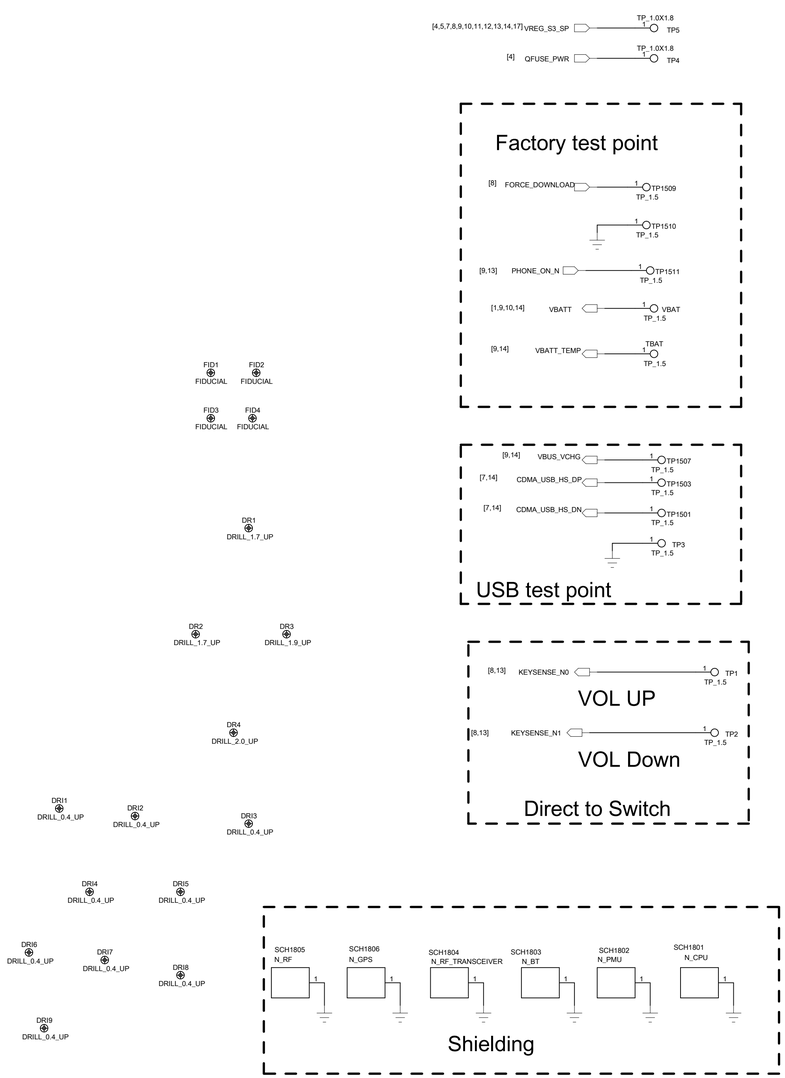


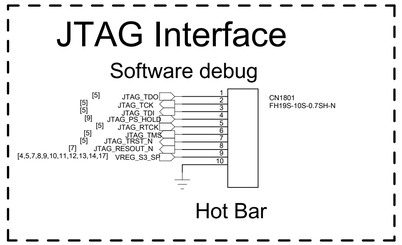


| | | | |
|---|---|---|---|
| DRAWN: | DATED: | COMPANY: | |
| CHECKED: | DATED: | TITLE: OTHER | |
| QUALITY CONTROL: | DATED: | CODE: / SIZE: / DRAWING NO: | REV: |
| RELEASED: | DATED: | SCALE: | SHEET: OF |

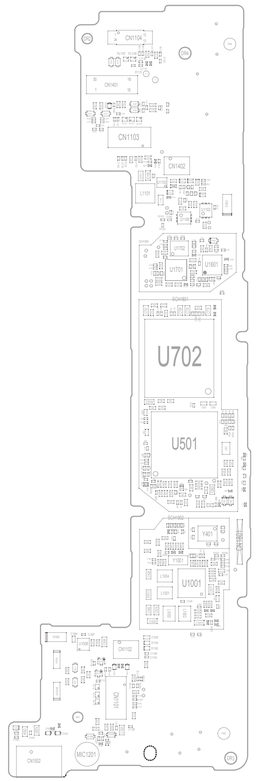
CN1104
CN1401
CN1103
CN1402
U702
U501
U1001
CN1102
MIC1201
CN1202

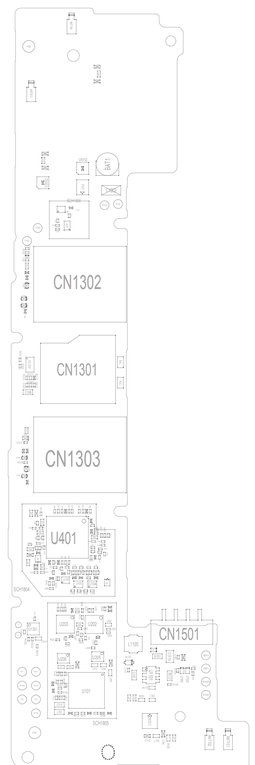
CN1302
CN1301
CN1303
U401
CN1501